SECURITY DOOR CONTROLS

801 Avenida Acaso, Camarillo, Ca. 93012 • (805) 494-0622 • Fax: (805) 494-8861
www.sdcsecurity.com • E-mail: service@sdcsecurity.com

INSTALLATION INSTRUCTIONS
HiTower® R7500, SCHLAGE L9080 MORTISE LOCK, SOURCE ZR (RETROFIT)
(REPLACES SDC 5000 SERIES)

For the door portion follow the enclosed mortise lock instructions.

For the frame portion (electric actuator) read these instructions carefully.

To insure a neat and easy installation of the electric actuator into the frame back box when making long wire runs, the heavier gauge wire can be terminated in a junction box above the door. At this point a smaller gauge wire cable may be run from the junction box to the frame electrical back box. This provides for easier insertion of the electric actuator.

For proper operation, the voltage as indicated on the lock solenoid must be at the lock location with the load on.

1. The wiring assignments are shown on the reverse side of this page as well as on the electric actuator. The lock is supplied with 6" wire leads and will require 10" leads from the conduit.

2. Attach power supply leads to lock leads as shown. Wire nuts are sufficient for these connections

3. Insert wires into the jamb carefully so they do not interfere with proper positioning of the lock in the cut-out.

4. Insert lock and secure with screws provided.

5. With the electric actuator power on, check to see if the levers are locked. On 7540 and 7550 models only the outside lever should lock. The actuator is set for 1/8" door clearance as shipped from the factory. If the clearance between the door and the jamb is more or less than 1/8" the following adjustment must be made (refer to Fig. E).
   A. Loosen the allen screw in the plunger.
   B. Remove plunger head.
   C. Turn each adjustment screw **equally** in desired direction. Counter-clockwise for wide gaps - clockwise for narrow gaps.
   IMPORTANT: ADJUSTMENT SCREWS MUST BE TURNED EQUALLY TO OPERATE FREELY.

   D. Replace plunger head and test lock. Lever should lock when actuator is energized.

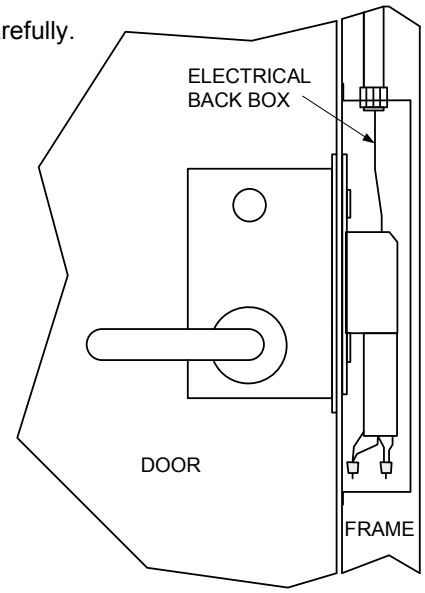

Electric Actuator Solenoid points down when actuator is used with:

SOURCE MODEL:

R Schlage
L9080

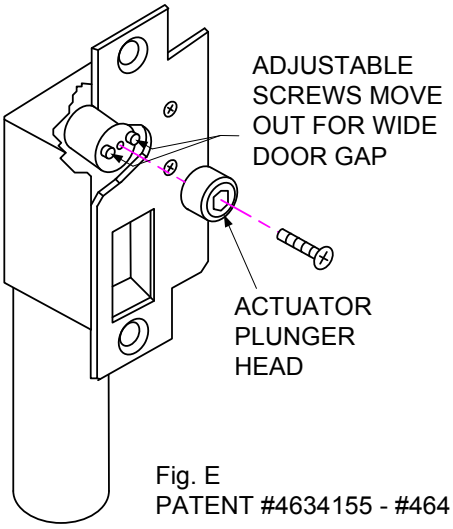

Fig. E
PATENT #4634155 - #4641867

Strike Plate Dimensions
For Metal Frames: 4-7/8" x 1-1/4" x .0937"

ID Requirements
Standard Actuator: 12" x 2-1/2" x 2"

Fails Safe: Continuous duty – locked when energized
UL Listed: Electrically controlled single point locks or latches.

Any suggestions or comments to this instruction or product are welcome. Please contact us through our website or email engineer@sdcsecurity.com

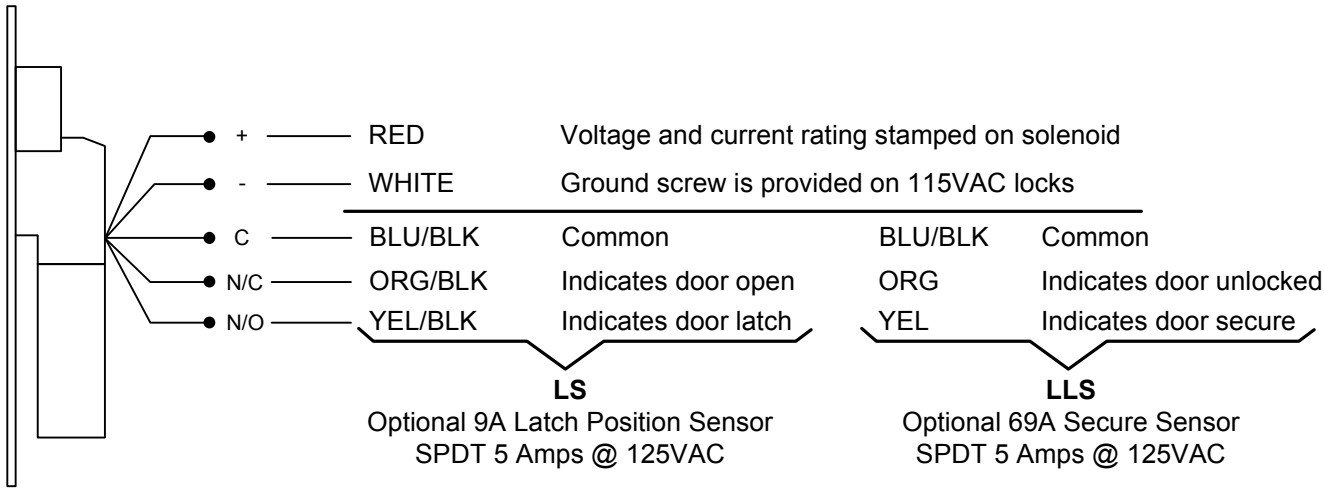

* Wiring assignments for the optional SC-10 cable with socket connectors are the same

VOLTAGE	24VDC	24VAC	115VAC
RESISTANCE IN OHMS ±5%	47.6	13.6	.20
AMPS	.45	.5	.20

Important Note: Because of design, field OHM tests of AC solenoids may produce erratic readings and cannot be used to determine the solenoids condition.

FUNCTIONS

7510 Mortise lock is unlocked by remote switch.
Suggested: storerooms, records, utility, tool cribs, man trap

7520 Mortise lock is unlocked by remote switch or outside key
Suggested: storerooms, records, utility, tool cribs, man trap

7530 Mortise lock is unlocked by remote switch, or by a key from either side.
Suggested: communicating locks, man trap

7540 Mortise lock is unlocked by remote switch, or by rotating the inside lever which retracts the mortise latch bolt and the auxiliary latch
Suggested: stair tower doors, control centers vaults, man trap

7550 Mortise lock is unlocked by remote switch, or by an outside key or by rotating the inside lever
Suggested: stair tower doors, classrooms, laboratories, offices, man trap

TROUBLE SHOOTING HiTOWER® 7500 SERIES

The 7500 Series is a (PL) Electric Power to Lock Unit which is failsafe in that it unlocks when power is removed. The most commonly used function is the 7540 and 7550 models which are locked when energized on the outside and free on the inside for egress. Models 7510, 7520 and 7530 lock on both sides when energized.

PROBLEM	CAUSE	SOLUTIONS
(1) Power on controller plunger does not throw	1A Insufficient voltage	1A Check voltage with a meter at the lock farthest from source with all locks energized. Meter should indicated the same voltage stamped on the solenoid body. If voltage is low either too small of a wire gauge was used or there is too great of a load on the line.
	1B Binding caused by uneven plunger adjustment	1B Adjust plunger evenly.
	1C Electric portion wired wrong	1C Review wiring diagram on side of lock & instruction sheet.
(2) Latch bolt throws only part way Lock chatters or buzzes.	2A Door alignment does not permit latch bolt to enter strike.	2A **Proper alignment must be achieved by correctly hanging the door in a properly installed frame, modifying the lock and strike will not remedy the problem.** Modification will only void UL listing and warranty.
(3) Inside lever is locked, outside is free	3A Incorrect handing	3A Remove Mortise lock & reverse hand.
(4) Latch position switch does not signal properly.	4A 9A adjustment is off.	4A Adjust sensor. See Step 1 of instructions