METHOD OF OPERATION / APPLICATION USE:

BOTH DOORS ARE NORMALLY CLOSED AND UNLOCKED. OPENING EITHER DOOR CAUSES THE OTHER DOOR TO LOCK UNTIL THE OPENED DOOR RETURNS TO ITS NORMAL (CLOSED) STATE. RED & GREEN LED'S LOCATED AT EACH DOOR WILL INDICATE THE DOOR STATUS (GRN ON = UNLOCKED; RED ON = LOCKED). LOCAL PULL STATIONS WILL OVERRIDE THE INTERLOCK BY REMOVING POWER TO THE LOCK.

NOTE: DOOR CONTACT CIRCUIT IS CLOSED (SHORTED) WHEN THE DOOR IS IN THE CLOSED POSITION.

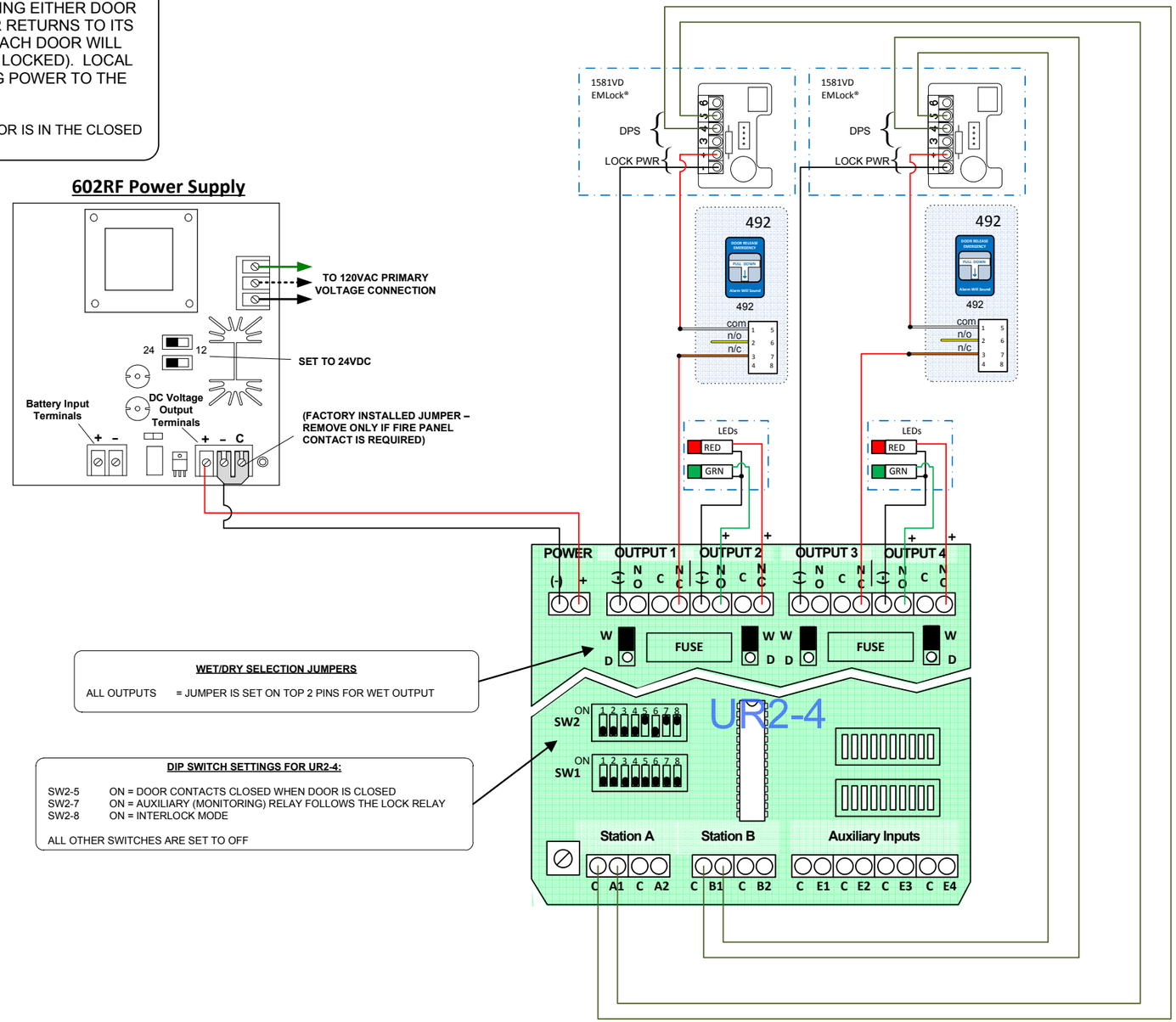

WET/DRY SELECTION JUMPERS

ALL OUTPUTS = JUMPER IS SET ON TOP 2 PINS FOR WET OUTPUT

DIP SWITCH SETTINGS FOR UR2-4:

SW2-5 ON = DOOR CONTACTS CLOSED WHEN DOOR IS CLOSED
SW2-7 ON = AUXILIARY (MONITORING) RELAY FOLLOWS THE LOCK RELAY
SW2-8 ON = INTERLOCK MODE

ALL OTHER SWITCHES ARE SET TO OFF

GENERAL NOTES:

(1) ALL LOW VOLTAGE SIGNAL WIRING SHALL BE 18-GAUGE MINIMUM. THE MINIMUM INDUCTIVE LOAD (LOCK) POWER WIRE GAUGE SHALL BE DETERMINED PER THE SDC WIRE GAUGE CHART. ALL WIRING (SINGLE OR MULTI-CONDUCTOR) SHALL BE COLOR CODED WITHOUT SPLICES. A MINIMUM OF TWO SPARE CONDUCTORS IS RECOMMENDED.

(2) SPECIFY VOLTAGE WHEN ORDERING PRODUCTS. VOLTAGE IS NOT SPECIFIED ON THIS WIRE DIAGRAM, BE SURE ALL PRODUCTS ARE VOLTAGE COMPATIBLE.

(3) ALL WIRING MUST CONFORM TO NATIONAL, STATE AND LOCAL CODES.

(4) ALWAYS CONSULT WITH THE AUTHORITY HAVING JURISDICTION (AHJ) BEFORE INSTALLATION.

(5) WHERE REQUIRED BY CODE, CONNECT FAILSAFE SYSTEMS TO THE LOCAL FIRE LIFE SAFETY SYSTEM FOR EMERGENCY RELEASE.

(6) DOOR POSITION SWITCHES SHOWN WITH THE DOOR CLOSED

© Security Door Controls

Security Door Controls
801 Avenida Acaso
Camarillo, CA 93012
t 805.494.0622 ~ *f* 805.494.8861
www.sdcsecurity.com

NOTE: ALL WIRING MUST BE REVIEWED AND APPROVED BY THE PROJECT ENGINEER ASSIGNED TO THE LOCATION FOR ITS CORRECTNESS AND SUITABILITY FOR THE APPLICATION IN WHICH THE EQUIPMENT IS INSTALLED AND OPERATED. ALL WIRING MUST CONFORM TO NATIONAL, STATE, AND LOCAL CODES FOR CLASS 2 FIRE PROTECTION AND CONTROL DEVICES.

PROJECT NAME: Solution #9 - Two Door Interlock A	TITLE: TWO DOOR INTERLOCK A w/ LED's & PULL STATIONS				SO NO.:	REV -
LOCATION.: --	DIST.: --	CONTACT: --	DATE:	DRAWN BY: ML	DWG. NO.:	Page 1 of 1